FACT SHEET

PRODUCT NAME	**: DRYSPELL PLUS**
MODEL	**: DRYSPELL PLUS 200**
ITEM CODE	**: PD211 (without Cover & Includes external Pre - Filter)**
	PD233 (without Cover & without external Pre - Filter)
	PD222 (with Cover & without external Pre - Filter)

1. SPECIFICATIONS

Flow : 200 scfm
Maximum Operating Pressure : 16 bar (g) (232 PSI (g))
Rated Air Inlet Temperature : 38^0 C (100^0F) (ISO:7183-1986 (E)) rated Dewpoint
Rated Operating Pressure : 7 bar (g) (101.5 PSI (g))
Recommended External Pre-Filter Rating: 0.01 Microns (ISO: 8573-1:2010 (E) Class 1)
Cycle Time : 4 Minutes
Operating Voltage : 100-240 VAC 50/60 Hz 1 Ph
Dew Point : -40^0 C(-40^0 F) PDP (ISO: 8573-1:2010 (E) Class 2)
End Connections : 1 1/2" NPT
Purge Loss : 15±1%
Noise Level : <70 dBA
Pressure Drop : <0.3 bar (g) (<4.3 PSI (g))

2. TECHNICAL DATA

2.1 ADSORBER DATA

Type of adsorbent : Mixed Bed of Activated Alumina & Molecular Sieves
Adsorber Shell : Aluminum IS 63400
Top & Bottom Block : Aluminum IS 63400

2.2 PROCESS DATA

Description	Purge Optimizer			
	100%	80%	60%	40%
Cycle Time (min)	4	4	4	4
Drying Time (min)	2	2	2	2
Regeneration Time (Sec)	90	72	54	36
De-pressurization time (sec)	30	48	66	84

3. FILTER DATA

3.1 Standard with all units

Internal Built In After Filter Micron Rating : 25 Micron (ISO:8573-1:2010 (E) Class 5)

3.2 Included with Item Code PD211

External Pre-Filter Particle Removal Rating	: 0.01 Micron (ISO:8573-1:2010 (E) Class 1)
Pre- Filter Oil Removal Rating	: 0.01 mg/m^3 (ISO:8573-1:2010 (E) Class 1)
Filtering Media	: Borosilicate Microfiber Glass
Efficiency	: 99.9%

3.3 Optional for all Units

External Post- Filter Particle Removal Rating	: 1 micron (ISO:8573-1:2010 (E) Class 2)
Post-Filter Oil Removal Rating	: 0.5 mg/m3 (ISO:8573-1:2010 (E) Class 3)

4. ELECTRICAL DATA

Controller	: Custom Made Micro-Processor Based
Make	: Trident
Input Voltage	: 100-240 VAC 50/60 Hz 1 Ph
Output	: 24VDC
Display	: LED Indication for Drying, Re-Pressurization & Drain
Enclosure	: IP55 Protection
Certification	: cUL USA Marking

Dew Point Stretch Cycle:

It stretches the moisture loading time of the desiccant bed by increasing the drying time. A dew point meter at the outlet with a required dew point setting provides the signal for the stretch cycle. This reduces the purge air in accordance to the air flow and dewpoint chosen. The purge occurs for the preprogrammed time during this time.

Purge Optimizer:

It reduces the percentage of regeneration flow based on the front panel setting. It has 4 options 40%, 60%, 80% & 100% purge optimization cycles respectively. The settings correspond to flow or moisture load through the dryer.

Separate LED Indicators for Tower Status, Purge Optimizer & Condensate Drain

INSTRUCTIONS		
Receiving Inspection Plan	TPP.\ENG\03	REV.00 CLAUSE 03

REV.No	Date	Details of Revision	ECN Ref.	Appd. By
0 - 1	25-02-13	Height changed 1555 (61") changed to 1615 (64") and 1504 (59") changed to 1564 (62")	597	RS
1 - 2	03-07-14	Controller with SMPS changed, its mounting parts added and 574 changed to 576	762	DNA

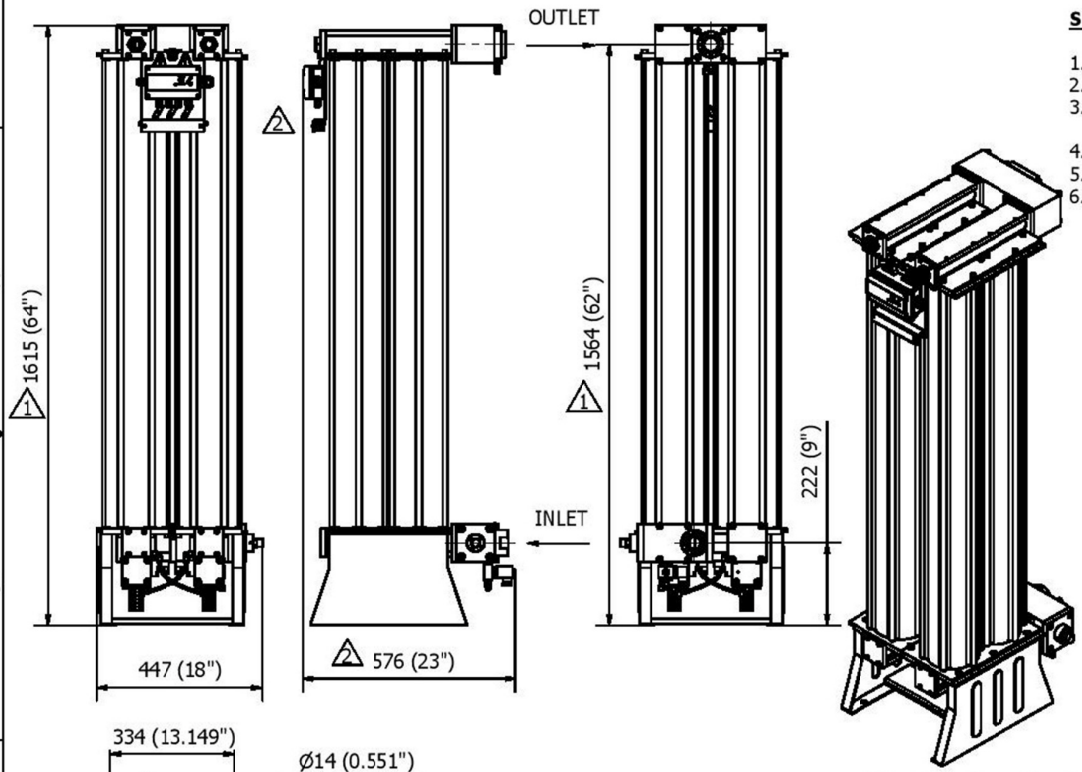

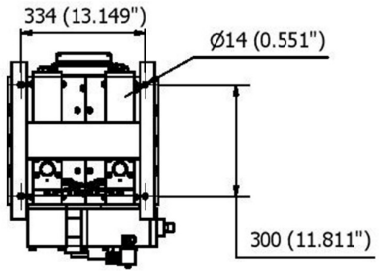

SPECIFICATIONS

1. Flow : 200 scfm
2. Maximum Operating Pressure : 16 bar (g) (232 PSI (g))
3. Rated Air Inlet Temperature : 38° C (100°F) (ISO:7183-1986 (E)) rated Dewpoint
4. Rated Operating Pressure : 7 bar (g) (101.5 PSI (g))
5. No. of Towers : 2
6. End Connection : 1 1/2" NPT (F)

ELECTRICAL:

Power Input : 110-240V AC 50/60 HZ
Power Consumption : 12 Watts (Max.)

FILTER ASSY 1 1/2" - NPT -1 NO.

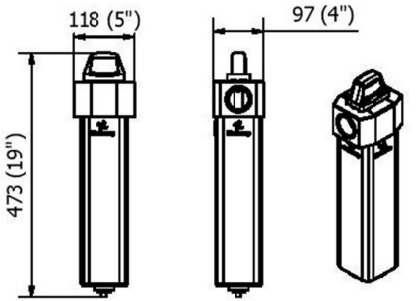

Does this drawing contains critical Interface Dimensions :	TITLE	CUSTOMER	
Critical to Quality Characteristics Marked thus :	DRYSPELL PLUS 200 WITHOUT COVER	PRODUCT	DRYSPELL PLUS
UNLESS OTHERWISESPECIFIED USE THE FOLLOWING	UNLESS SPECIFIED ALL DIMS. ARE IN mm (Inch)	DRG NO	PD211
GENERAL TOLERANCE FOR LINEAR DIMENSION IS 2102 (PART 1) 1993 ISC 2768 -1: 1989 3.2	SCALE NTS / SHEET 1 OF 1	REV LEVEL	R2
DIMS. 0.5-6 / 6-30 / 30-120 / 120-400 / 400-1000 / 1000-2000 / 2000-4000	MATERIAL :	File :	\\drawings\dryspell\big dryspell
MEDI ±0.1 / ±0.2 / ±0.3 / ±0.5 / ±0.8 / ±1.2 / ±2	QTY: 1 No/unit	MEASUREMENT SHOULD NOT BE TAKEN AS REF. FROM DRG.	
	APPROVED KSN 07-02-13	TRIDENT	
	CHECKED JP 07-02-13		
	DRAWN MRP 07-02-13		

This Drawing which Contains Proprietary information is the property of Trident Pneumatics Pvt. Ltd. It shall not be reproduced in any manner nor disclosed to third parties without getting written permission of Trident Pneumatics Pvt. Ltd.

TRIDENT

INSTRUCTIONS		
Receiving Inspection Plan	TPPL\ENG\D03	REV.00 CLAUSE 03

REV.No	Date	Details of Revision	ECN Ref.	Appd. By
0 - 1	25-02-13	Height changed 1555 (61") changed to 1615 (64") and 1504 (59") changed to 1564 (62")	597	RS
1 - 2	03-07-14	Controller with SMPS changed, its mounting parts added and 574 changed to 576	762	DNA

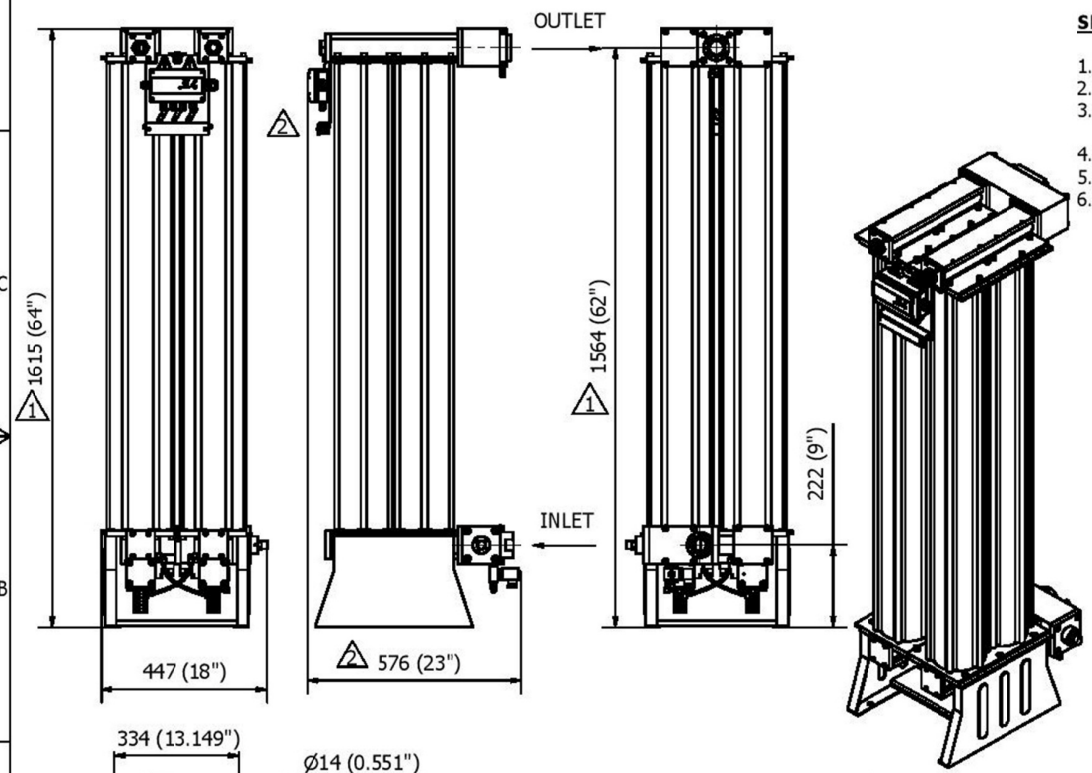

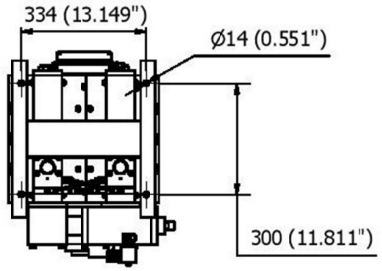

SPECIFICATIONS

1. Flow : 200 scfm
2. Maximum Operating Pressure : 16 bar (g) (232 PSI (g))
3. Rated Air Inlet Temperature : 38° C (100°F) (ISO:7183-1986 (E)) rated Dewpoint
4. Rated Operating Pressure : 7 bar (g) (101.5 PSI (g))
5. No. of Towers : 2
6. End Connection : 1 1/2" NPT (F)

ELECTRICAL:

Power Input : 110-240V AC 50/60 HZ
Power Consumption : 12 Watts (Max.)

Does this drawing contains critical Interface Dimensions :
Critical to Quality Characteristics Marked thus :

UNLESS OTHERWISESPECIFIED USE THE FOLLOWING

GENERAL TOLERANCE FOR LINEAR DIMENSION IS 2102 (PART 1) 1993 ISO 2768 - 1: 1989 — 3.2

DIMS.	0.5-6	6-30	30-120	120-400	400-1000	1000-2000	2000-4000
MEDI	±0.1	±0.2	±0.3	±0.5	±0.8	±1.2	±2

This Drawing which Contains Proprietary information is the property of Trident Pneumatics Pvt. Ltd. It shall not be reproduced in any manner nor disclosed to third parties without getting written permission of Trident Pneumatics Pvt. Ltd.

TITLE
DRYSPELL PLUS 200
WITHOUT FILTER AND COVER

UNLESS SPECIFIED ALL DIMS. ARE IN mm (Inch)

SCALE	SHEET
NTS	1 OF 1

MATERIAL : QTY: 1 No/unit

APPROVED	KSN	07-02-13
CHECKED	JP	07-02-13
DRAWN	MRP	07-02-13

CUSTOMER	
PRODUCT	DRYSPELL PLUS
DRG NO	PD233
REV LEVEL	R2
File :	\\drawings\dryspell\big dryspell

MEASUREMENT SHOULD NOT BE TAKEN AS REF. FROM DRG.

TRIDENT

TRIDENT

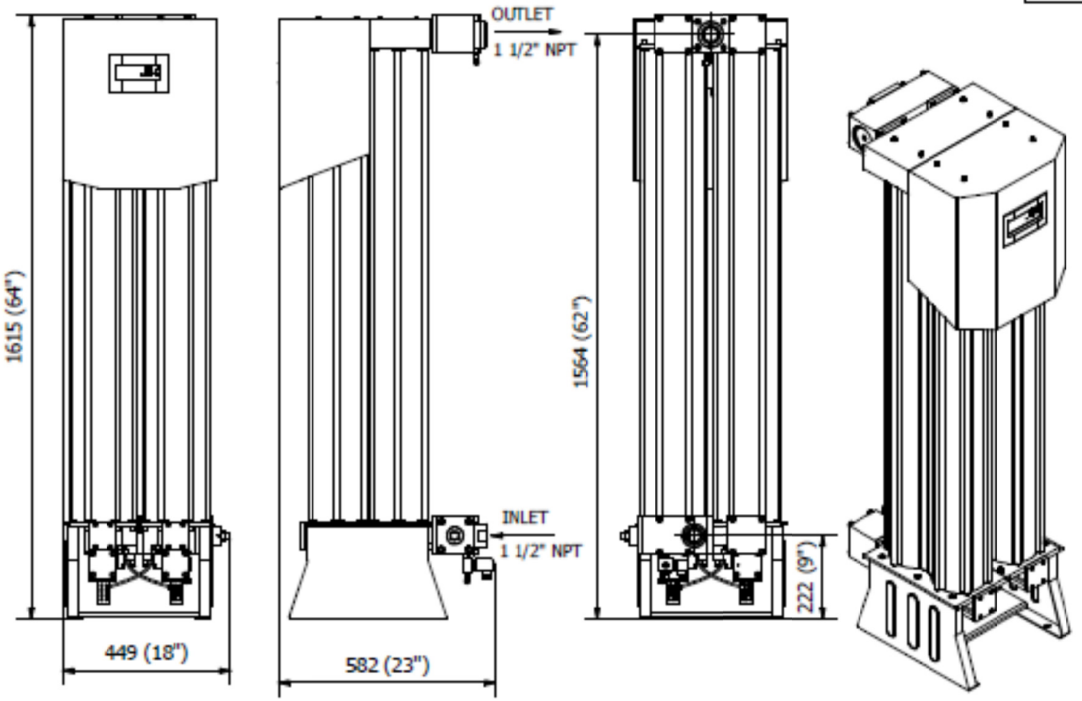

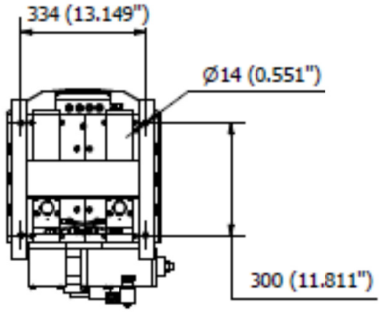

INSTRUCTIONS			REV.No	Date	Details of Revision	ECN Ref.	Appd. By
Receiving Inspection Plan	TPPL/ENG/03	REFER CLAUSE 03					

SPECIFICATIONS

1. Flow : 200 scfm
2. Maximum Operating Pressure : 16 bar (g) (232 PSI (g))
3. Rated Air Inlet Temperature : 38° C (100°F) (ISO:7183-1986 (E)) rated Dewpoint
4. Rated Operating Pressure : 7 bar (g) (101.5 PSI (g))
5. No. of Towers : 4
6. End Connection : 1 1/2" NPT (F)

ELECTRICAL:

Power Input : 110-240V AC 50/60 HZ
Power Consumption : 12 Watts (Max.)

Does this drawing contains critical Interface Dimensions :								
Critical to Quality Characteristics Marked thus :								
UNLESS OTHERWISESPECIFIED USE THE FOLLOWING								
GENERAL TOLERANCE FOR LINEAR DIMENSION IS:2102 (PART 1) 1993 ISO 2768 -1: 1989								3.2
DIMS.	0.5-6	6-30	30-120	120-400	400-1000	1000-2000	2000-4000	
MEDI	±0.1	±0.2	±0.3	±0.5	±0.8	±1.2	±2	

This Drawing which Contains Proprietary information is the property of Trident Pneumatics Pvt. Ltd. It shall not be reproduced in any manner nor disclosed to third parties without getting written permission of Trident Pneumatics Pvt. Ltd.

TITLE		
DRYSPELL PLUS 200 WITHOUT FILTER		
UNLESS SPECIFIED ALL DIMS. ARE IN mm		
	SCALE	SHEET
	NTS	1 OF 1
MATERIAL :		QTY: 1 No/unit
APPROVED	RS	14-02-17
CHECKED	DR	14-02-17
DRAWN	MRP	14-02-17

CUSTOMER	
PRODUCT	DRYSPELL PLUS
DRG NO	PD222
REV LEVEL	R0
File :\jdrawings\dryspell\dryspell plus	
MEASUREMENT SHOULD NOT BE TAKEN AS REF. FROM DRG.	

TRIDENT

TRIDENT

Instructions		
Receiving Inspection Plan	TPPL\ENG\D03	REV. 00 CLAUSE 03

REV.No	Date	Detailes of Revision	ECN Ref.	Appd.By
R0 - R1	24-11-16	Connector position changed,legends changed, Supply changed	948	KSN
R1 - R2	19-04-17	Notes and Legends changed	995	KSN

CONTROLLER ELECTRICAL DIAGRAM

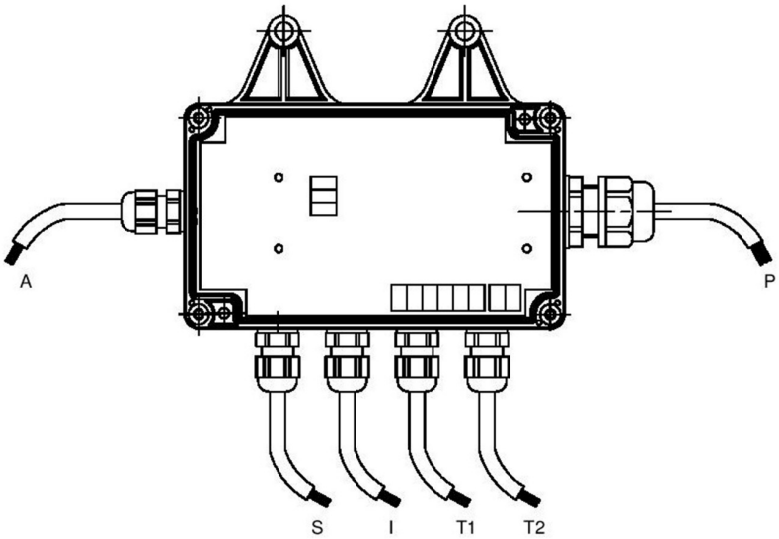

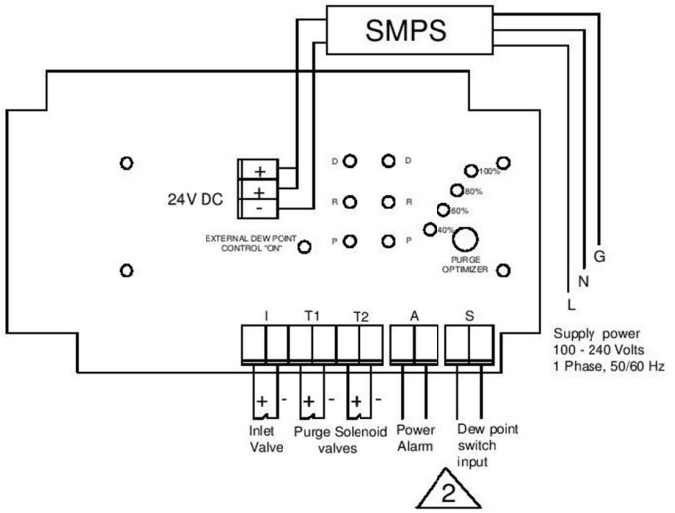

Note:

P - Power
T1 - Tower 1 Solenoid
T2 - Tower 2 Solenoid
I - Inlet Valve
S - Dew point switch input *
A - Power alarm *

2

Power alarm logic
Controller powered : Contact closed
Controller not powered : Contact Open

2

Econo Mode : Dew point 'good' contact closed
Run Mode : Contact open
Dryer will stop switching towers and purge air until contacts are open (Dew point poor)

2 * Optional for Customer interface

Does this drawing contains critical Dimensions :	TITLE	CUSTOMER	
Critical to Quality Characteristics Marked thus :	CONTROLLER DS31-200 ELECTRICAL	PRODUCT	Dryspell Plus
UNLESS OTHERWISESPECIFIED USE THE FOLLOWING	UNLESS SPECIFIED ALL DIMS. ARE IN mm	DRG NO	AD1671
GENERAL TOLERANCE FOR LINEAR DIMENSION IS 2102 (PART 1) 1993 ISO 2768 -1: 1989 — 3.2	SCALE: NTS / SHEET: 1 OF 2	REV LEVEL	R2
DIMS. 0.5-6 / 6-30 / 30-120 / 120-400 / 400-1000 / 1000-2000 / 2000-4000	MATERIAL:	File :	\\drawings\dryspell
MEDI ±0.1 / ±0.2 / ±0.3 / ±0.5 / ±0.8 / ±1.2 / ± 2	QTY: 1 no./units	MEASUREMENT SHOULD NOT BE TAKEN AS REF. FROM DRG.	
This Drawing which Contains Proprietary information is the property of Trident Pneumatics Pvt. Ltd. It shall not be reproduced in any manner nor disclosed to third parties without getting written permission of Trident Pneumatics Pvt. Ltd.	APPROVED KSN 06-06-11 / CHECKED RS 06-06-11 / DRAWN MRP 06-06-11	TRIDENT	

TRIDENT